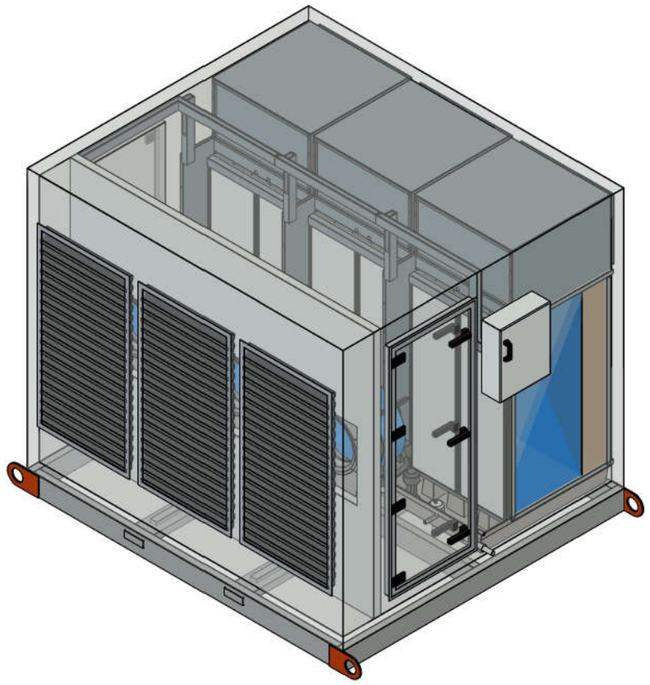

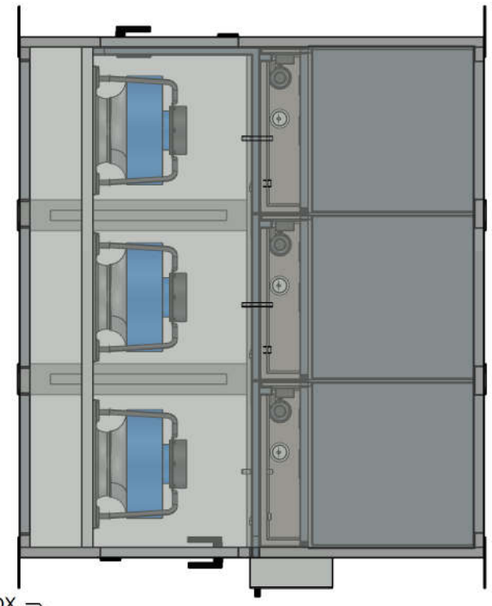

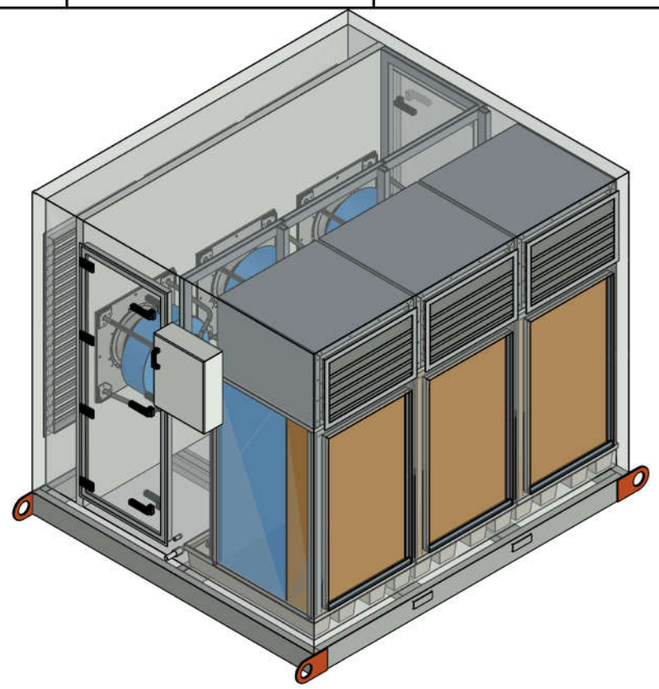

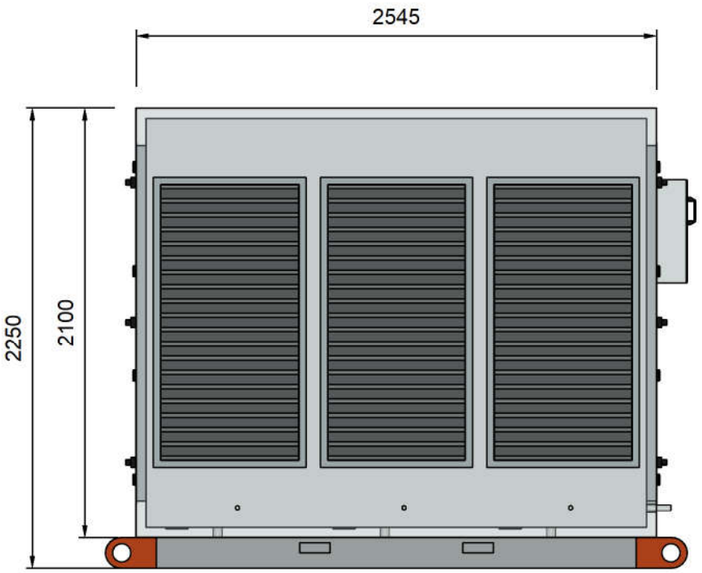

F/A SIDE

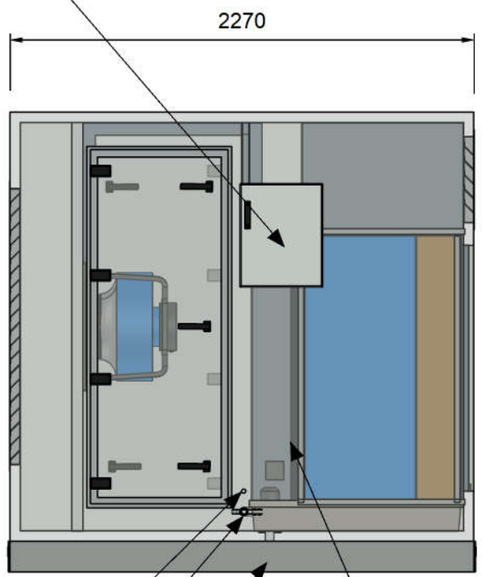

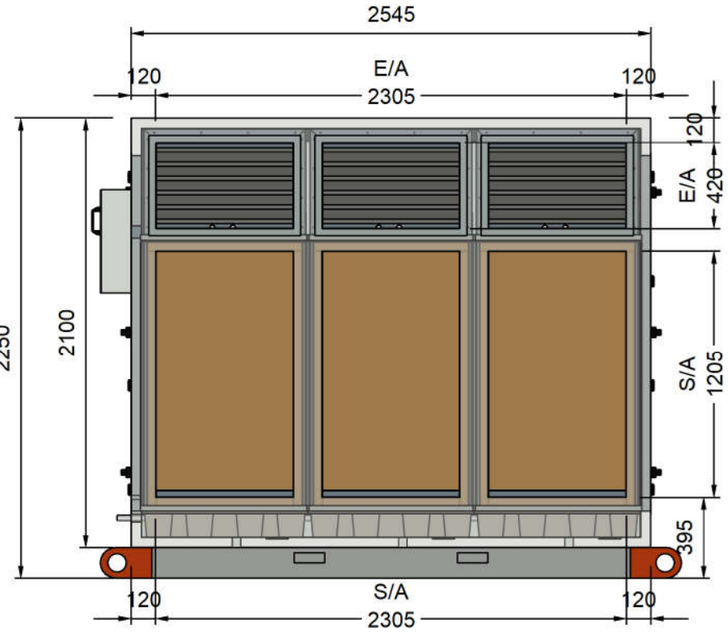

E/A + S/A SIDE

Notes:
- **All Panels are 50mm Colorbond Panel Casing**
- **Minimum 1200mm Clearance Required from Access Panel**

E	A3	General Tolerances acc to :	**INDEC6000P3**		
	Scale	ISO 2768-1 medium	Drawn TR	Checked	Dat. 3/03/2020 12:32 PM
armcar air solutions		Title **INDEC 6000P3**	Sheet 3 of 9	Rev. A	S/N.